PowerStation®
AUTOMATIC POWER SYSTEM

PARTS MANUAL

MODEL SERIES: P1204

12 kW Stationary Standby Electric Generator

Product style and configuration may vary.

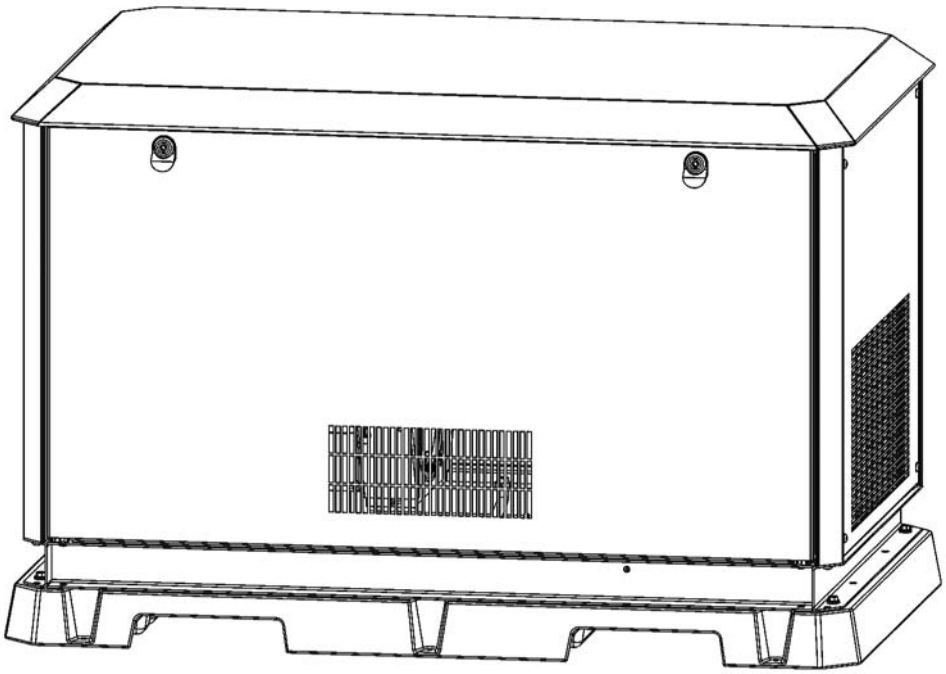

Thoroughly read the OPERATOR'S MANUAL before operating the generator. Safe operation and top performance can be obtained only when equipment is operated and maintained properly.

⚠ DANGER ⚠

Deadly exhaust fumes!

This generator is designed to be installed outside only!

200-2666 - Revision A - 10/07

TABLE OF CONTENTS

BATTERY ASSEMBLY . . . . . PAGE 3

GENHEAD INLET PANEL ASSEMBLY . . . . . PAGE 4

CONTROL PANEL ASSEMBLY . . . . . PAGE 5

MUFFLER BOX ASSEMBLY . . . . . PAGE 6

ENGINE GENHEAD ASSEMBLY. . . . . PAGE 7

ENCLOSURE . . . . . PAGE 8

GENERATOR ASSEMBLY . . . . . PAGE 9

NOTES . . . . . PAGE 10-11

CUSTOMER SERVICE INFORMATION . . . . . PAGE 12

PARTS DRAWING - BATTERY ASSEMBLY

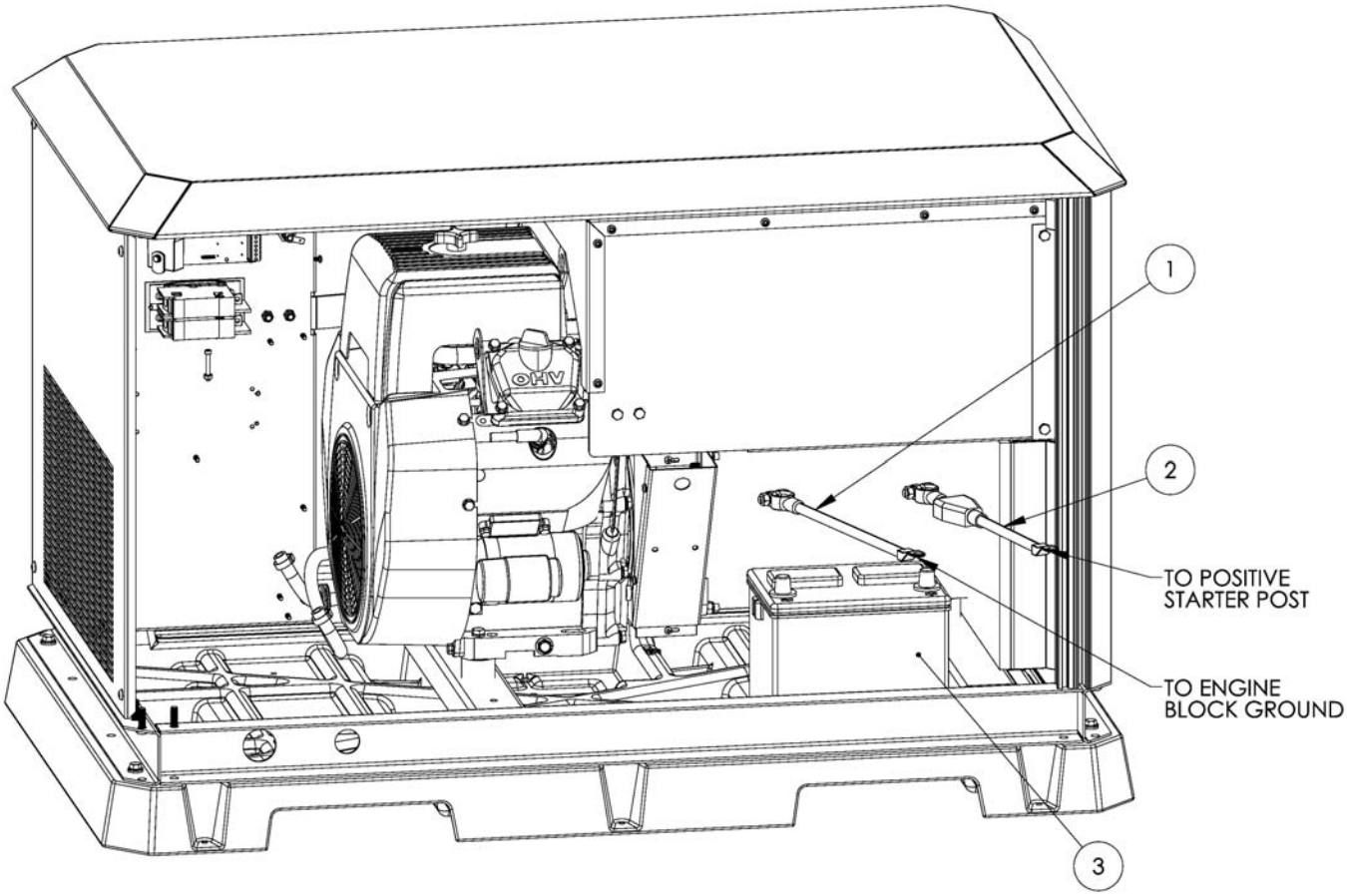

PARTS LIST - BATTERY ASSEMBLY

Item No.	Part Number	Qty	Description
1	026-0481	1	CABLE BATTERY, NEGATIVE
2	026-0480	1	CABLE BATTERY, POSITIVE
3	N/A	1	BATTERY, BCI GROUP 26 or 26R VENTED
*N/A - Must be purchased separately.			

PARTS DRAWING - GENHEAD INLET PANEL ASSEMBLY

NOTE: Seal all connections with gas tape. Use 2½ wraps minimum. Check all connections under pressure using a soap and water solution.

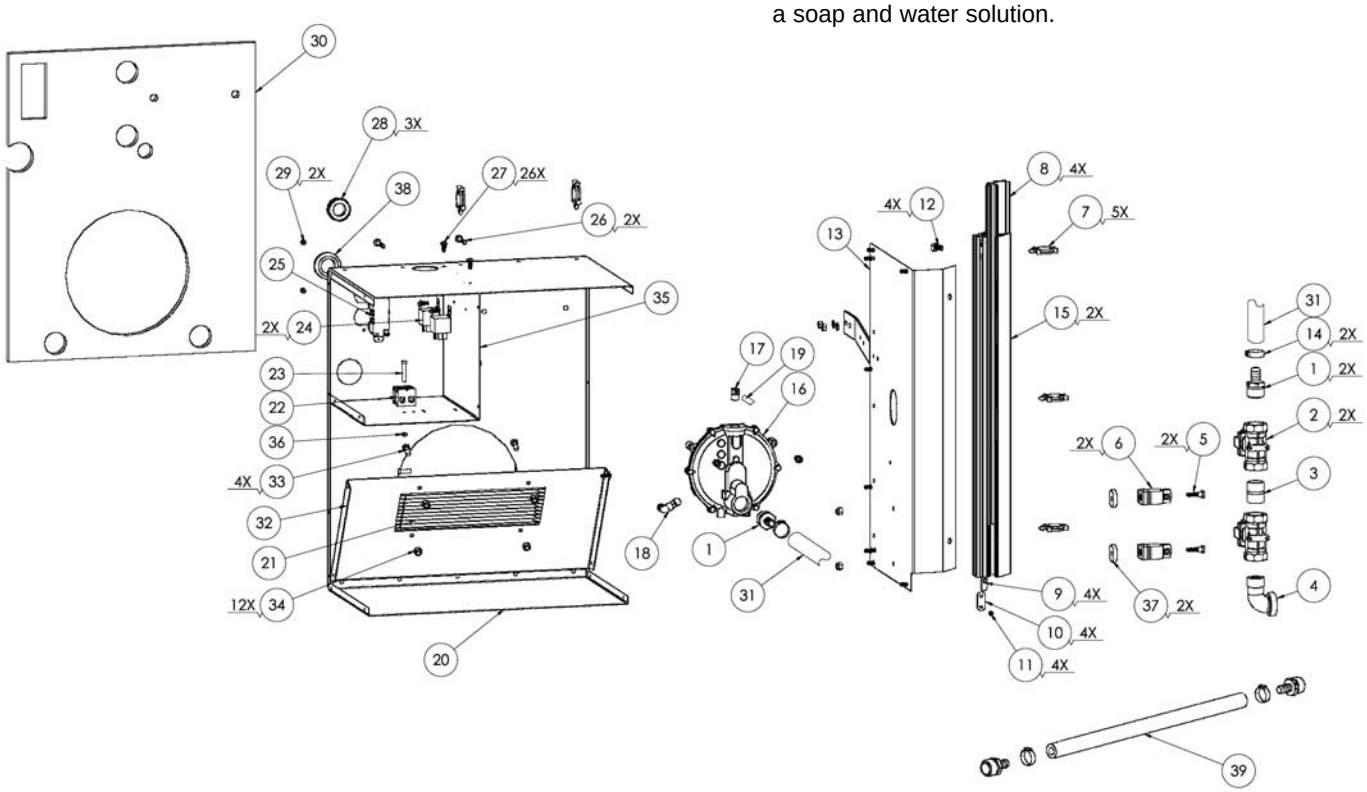

PARTS LIST - GENHEAD INLET PANEL ASSEMBLY - 22KW

Item No.	Part Number	Qty	Description
1	068-0076	2	FITTING 3/4NPT X 1/2BARB
2	026-0741	2	SOLENOID FUEL SHUT OFF
3	N/A	1	NIPPLE 3/4" NPT BLACK PIPE CLOSE
4	N/A	1	ELBOW, 3/4" STEEL NPT
5	N/A	2	BOLT HH 1/4-20 X 1.00
6	012-0142	2	CLAMP-CONDUIT, 1"
7	103-0160	5	CLIP-WIRE LOCKING PUSH MOUNT
8	093-0074	4	LINER-PLASTIC, EXTRUSION
9	058-0177	4	NUT-TEE, ZINC 5/16-18
10	058-0176	4	NUT-TEE, 1/4"-20, SLF LCK
11	061-0220	4	SCREW, 1/4-20 UNC CUP POINT SET
12	N/A	4	BOLT, 5/16" X 1/2 HEX HEAD
13	115-0397	1	INLET BOX SIDE, 12KW
14	N/A	2	CLAMP HOSE 1" ID
15	114-0652	2	EXTRUSION CORNER UPRIGHT
16	019-0252	1	REGULATOR-PRESSURE
17	064-0056	1	ELBOW 90 DEGREE BRASS
18	068-0088	1	CONNECTOR 1/8" NPTF x 3/8" TB
19	N/A	1	HOSE, FUEL 1/2"
20	115-0364	1	PANEL-ENGINE INLET

Item No.	Part Number	Qty	Description
21	0057079	1	OIL COOLER
22	026-0776	1	TERMINAL BLOCK
23	N/A	1	SCREW #8-32 X 1 1/4" LG SCKT HD
24	026-0798	2	RELAY DC 12V COIL
25	0037762.01	1	RECPT 5-20R BLK
26	N/A	2	BOLT HH 1/4-20 X 1.50
27	N/A	26	SCREW, #10 TRILOBE 1/2" PANHEAD
28	0057183	3	GROMMET .88ID X 1.50OD
29	N/A	2	SCREW, #08-32 X.25
30	094-0158	1	INSULATION, ENGINE INLET PANEL
31	012-0147	1	HOSE-FUEL, LP .50" ID
32	114-0664	1	BAFFLE-AIR INLET
33	N/A	4	BOLT HH 1/4-20 X .63 ZP
34	N/A	12	NUT 1/4-20 NYLON STOP
35	115-0378	1	CONTROL BOX BACK
36	N/A	1	NUT HEX #8-32 KEPS
37	N/A	2	WSHR-FLAT .344D X 1.125
38	093-0053	1	GROMMET 1" I.D. x 1 3/4" O.D.
39	145-0562	1	FUEL INLET ASSEMBLY

*N/A - These are standard parts available at your local hardware store.

PARTS DRAWING - CONTROL PANEL ASSEMBLY

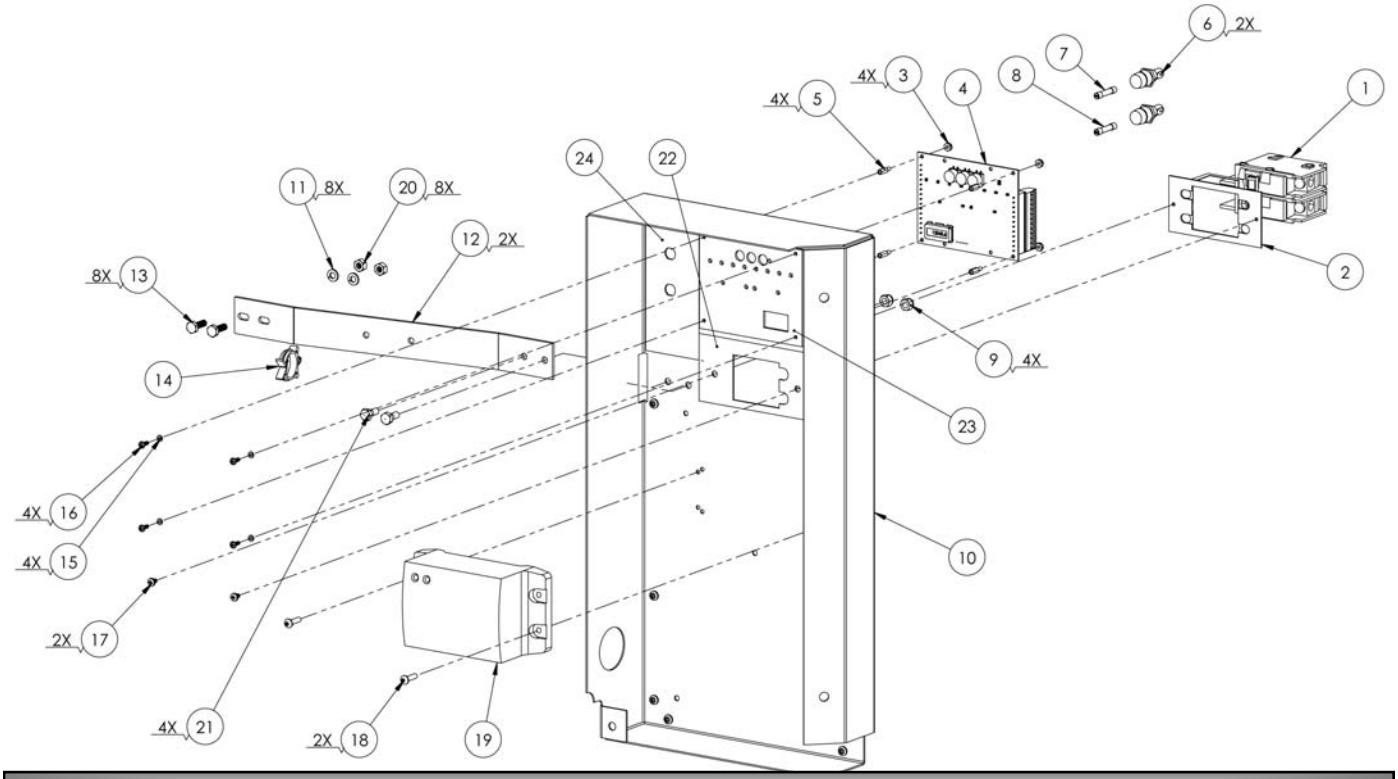

PARTS LIST - CONTROL PANEL ASSEMBLY

Item No.	Part Number	Qty	Description
1	002-0060	1	BREAKER CIRCUIT 50 AMP
2	0058069	1	BREAKER MOUNT CIR BREAKER
3	N/A	4	NUT #6-32 NYLON INSERT STOP
4	026-0780	1	CONTROLLER DYNAGEN, GSC200
5	061-0221	4	STANDOFF #6-32 UNC X .438
6	026-0309	2	FUSE HLDR
7	026-0518	1	FUSE 3AG TYPE 25 AMP 32V
8	026-0548	1	FUSE 3AG TYPE 5AMP 250 VOLT
9	N/A	4	NUT 1/4-20 NYLON STOP
10	115-0405	1	CONTROLLER BOX DYNAGEN, GSC200
11	N/A	8	WASHER LOCK 1/4 ZP
12	115-0398	2	SHROUD STAND-OFF BRACKET
13	N/A	8	BOLT HH 1/4-20 X .75
14	103-0160	1	CLIP-WIRE LOCKING PUSH MOUNT
15	N/A	4	WASHER, LOCK #06
16	N/A	4	SCREW, CRPH#06-32 X .38
17	N/A	2	SCREW, CRPH #08-32 X.25
18	N/A	2	SCREW, BUTTON HEAD #10-32 X 3/4" LG
19	0057217	1	BATTERY CHARGER
20	N/A	8	HX NUT 1/4
21	N/A	4	BOLT HH 1/4-20 X .63
22	098-3949	1	LABEL, BREAKER ON/OFF
23	098-3976	1	LABEL, OVERLAY DYNAGEN GSC200
24	098-3974	1	LABEL, FUSE
25	026-0781	1	(NOT SHOWN)WIRE HARNESS, ENGINE/CONTROLLER

*N/A - These are standard parts available at your local hardware store.

PARTS DRAWING - MUFFLER BOX ASSEMBLY

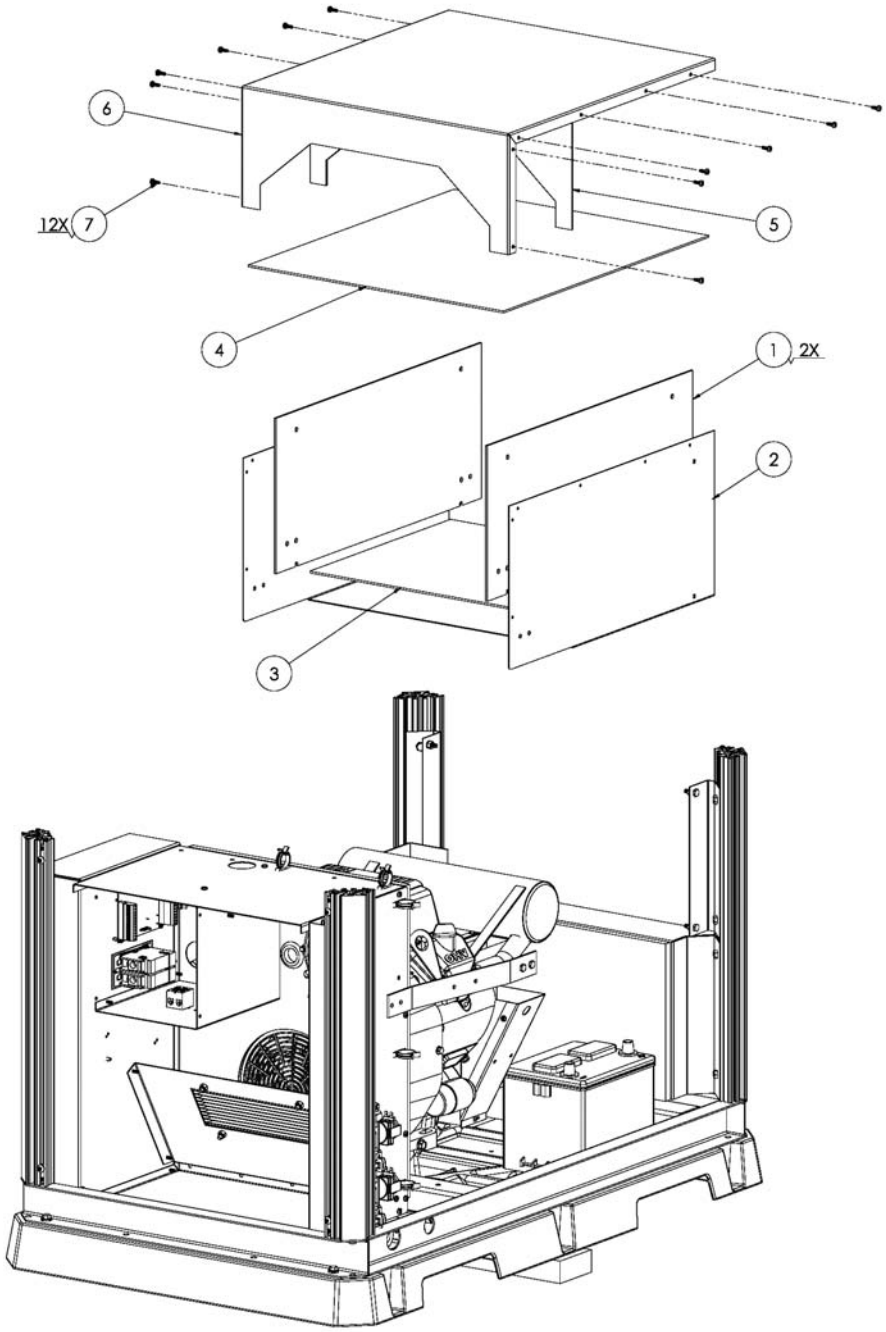

PARTS LIST - MUFFLER BOX ASSEMBLY

Item No.	Part Number	Qty	Description
1	094-0144	2	INSULATION, SIDES
2	115-0391	1	MUFFLER BOX BASE
3	094-0146	1	INSULATION, BOTTOM
4	094-0147	1	INSULATION, TOP
5	094-0150	1	INSULATION, FRONT SIDE
6	115-0392	1	MUFFLER BOX TOP
7	N/A	12	SCREW, #10 TRILOBE 1/2" PANHEAD TORX

*N/A - These are standard parts available at your local hardware store.

PARTS DRAWING - ENGINE GENHEAD ASSEMBLY

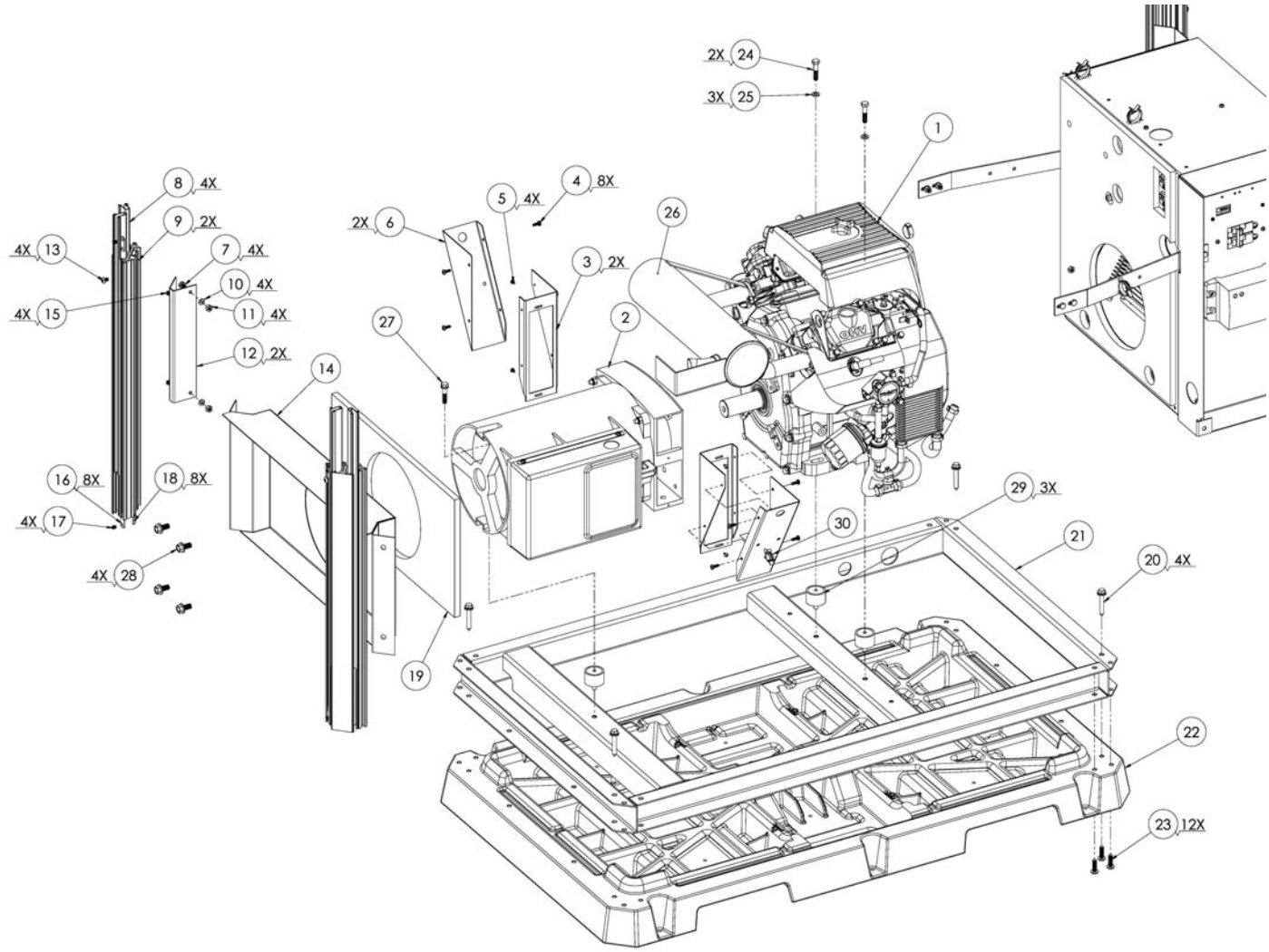

PARTS LIST - ENGINE GENHEAD ASSEMBLY

Item No.	Part Number	Qty	Description
1	025-0076	1	ENGINE, SUBARU, EH72
2	160-0309	1	GEN ASSY "UL" 1446 MECCALTE
3	115-0390	2	12KW GENHEAD AIR SCOOP
4	N/A	8	SCREW, #10 TRILOBE 1/2" PANHEAD
5	N/A	4	SCREW #8-18 X .375" LG
6	115-0389	2	GENHEAD AIR SCOOP COVER
7	N/A	4	BOLT HH 1/4-20 X .75
8	093-0074	4	LINER-PLASTIC, EXTRUSION
9	114-0652	2	EXTRUSION CORNER UPRIGHT
10	N/A	4	WASHER LOCK 1/4 ZP
11	N/A	4	HEX NUT 1/4 NC
12	115-0399	2	SHROUD MOUNTING BRACKET
13	N/A	8	BOLT, 1/4"X 3/8"-20
14	115-0366	1	PANEL-GENHEAD INLET
15	N/A	4	BOLT, 5/16" X 1/2 HEX HEAD
16	058-0176	8	NUT-TEE, 1/4"-20, SLF LCK, DUAL TAP
17	061-0220	4	SCREW, 1/4-20 UNC CUP POINT SET
18	058-0177	8	NUT-TEE, ZINC 5/16-18
19	094-0153	1	INSULATION-GENHEAD INLET
20	N/A	4	SCREW LAG 5/16" x 2"

Item No.	Part Number	Qty	Description
21	108-0185	1	ASSEMBLY-FRAME
22	109-0124	1	PALLET-PLASTIC
23	N/A	12	SCREW, 5/16"-18 X 3/4" LG
24	N/A	2	BOLT, 5/16NC HHCS X1 1/2 G5
25	N/A	3	WASHER LOCK 1/4 ZP
26	801-0007	1	MUFFLER, EH72, SUBARU
27	N/A	1	BOLT, 5/16NC HHCS X1 1/4 G5ZP
28	N/A	4	BOLT WHZ 3/8-16 X .75
29	094-0068	3	ISOLATOR, VIBRATION
30	103-0115	1	CLIP, WIRE HARNESS

*N/A - These are standard parts available at your local hardware store.

PARTS DRAWING - ENCLOSURE

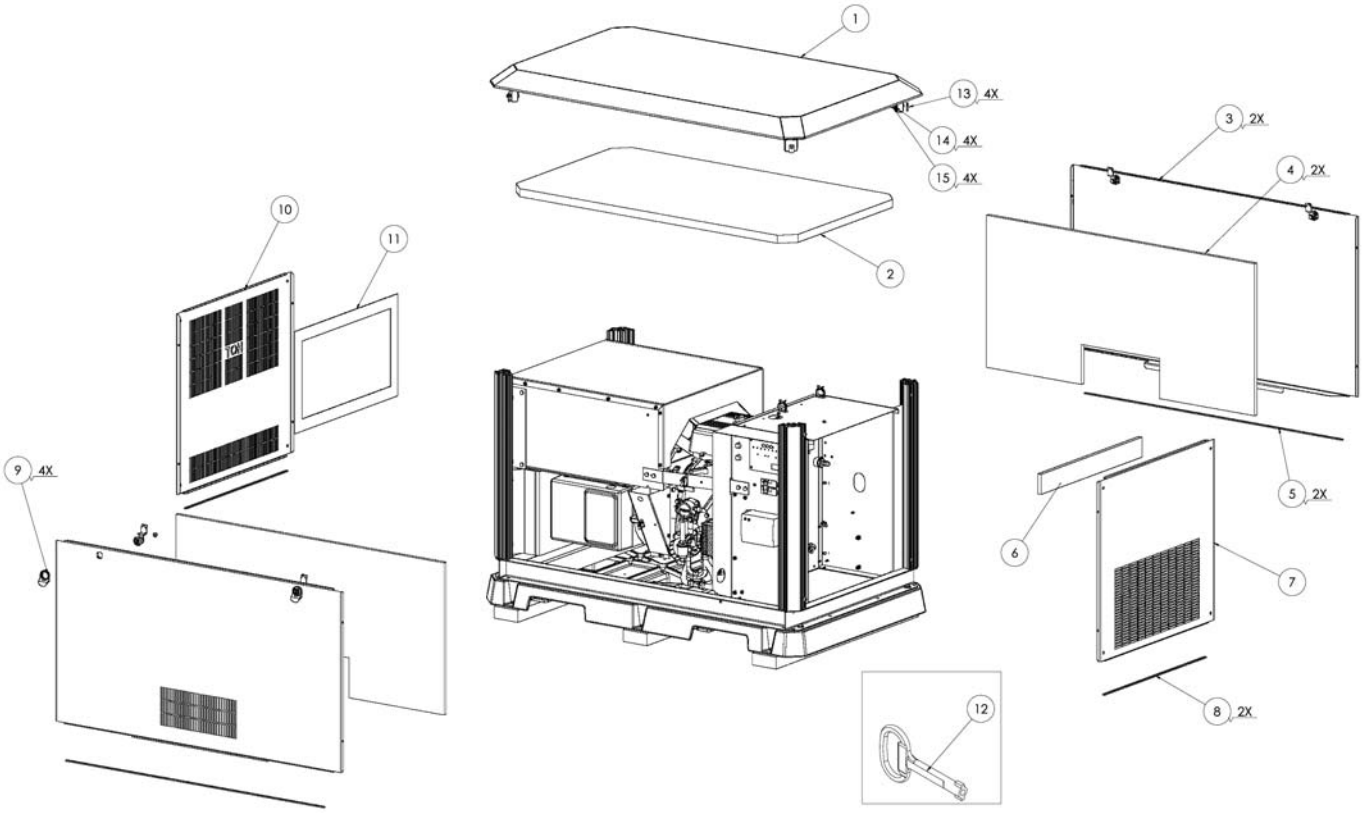

PARTS LIST - ENCLOSURE

Item No.	Part Number	Qty	Description
1	115-0367	1	STEEL LID ASSEMBLY *(INCLUDES INSULATION)*
	115-0431	1	ALUMINUM LID ASSEMBLY *(INCLUDES INSULATION)*
2	094-0152	1	INSULATION-LID
3	115-0369	2	STEEL ASSEMBLY-DOOR SIDE *(INCLUDES INSULATION & 1/4 TURN LATCHES)*
	115-0432	2	ALUMINUM ASSEMBLY-DOOR SIDE *(INCLUDES INSULATION & 1/4 TURN LATCHES)*
4	094-0151	2	INSULATION-DOOR PANEL
5	094-0149	2	WEATHER SEAL, 1/8 X 1/4 X 39.50
6	094-0160	1	INSULATION, AIR INLET DOOR PNL
7	115-0373	1	STEEL ASSEMBLY-DOOR AIR INLET *(INCLUDES INSULATION)*
	115-0433	1	ALUMINUM ASSEMBLY-DOOR AIR INLET *(INCLUDES INSULATION)*
8	094-0148	2	WEATHER SEAL, 1/8 X 1/4 X 21.50
9	112-0151	4	1/4 TURN LATCH ASSEMBLY, 32MM FINGER PULL
10	115-0375	1	STEEL ASSEMBLY-DOOR EXHAUST OUTLET *(INCLUDES INSULATION)*
	115-0434	1	ALUMINUM ASSEMBLY-DOOR EXHAUST OUTLET *(INCLUDES INSULATION)*
11	094-0159	1	INSULATION, EXHAUST OUTLET DOOR 12KW
12	146-0029	1	KEY-1/4 TURN LATCH
13	058-0177	4	NUT-TEE, ZINC 5/16-18 WIDE SPOT WELD
14	N/A	4	BOLT, 5/16NC HHCS X1 1/4 G5ZP
15	N/A	4	WASHER, STAR 5/16 EXT

*N/A - These are standard parts available at your local hardware store.

PARTS DRAWING - GENERATOR

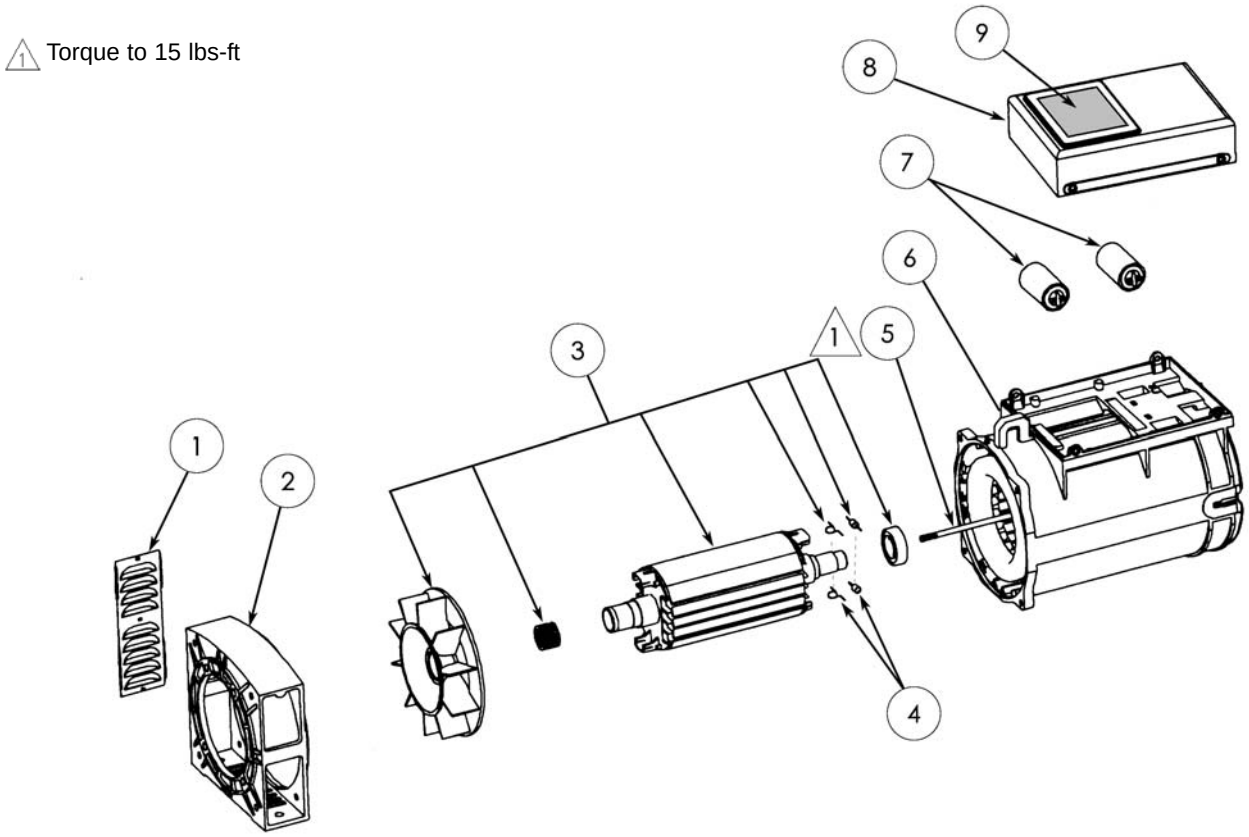

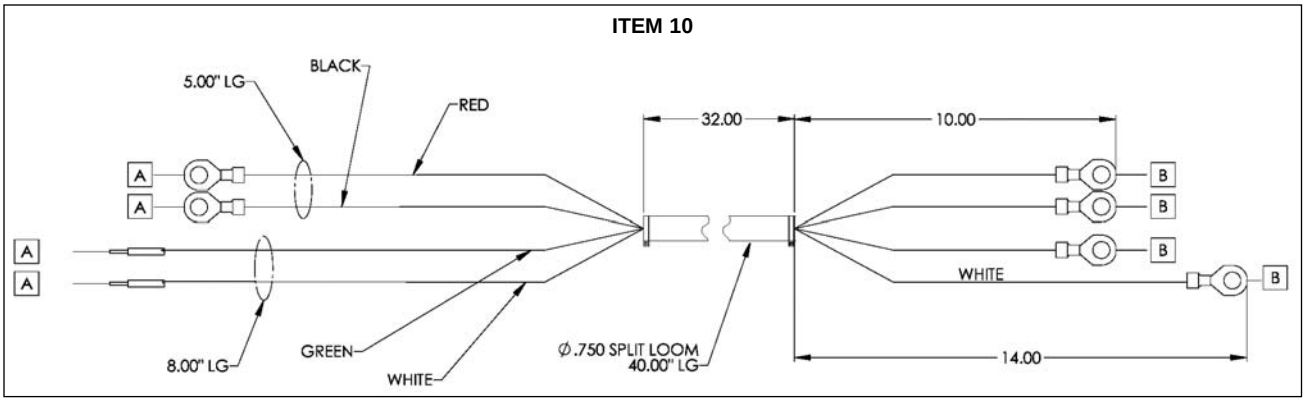

PARTS LIST - GENERATOR

Item No.	Part Number	Qty	Description
1	0056629	1	DISCHARGE LOUVERED COVER
2	0056623	1	ENGINE ADAPTER
3	160-0311	1	ROTOR ASSEMBLY
4	100-0003	2	DIODE/VARISTOR ASSEMBLY
5	059-0348	1	ROTOR BOLT
6	160-0312	1	STATOR ASSEMBLY
7	166-0133	2	CAPACITOR, 40F, 500V
8	077-0168	1	TERMINAL BOX COVER
9	098-2827	1	WARNING LABEL
10	026-0774	1	WIRE HARNESS, GENHEAD
--	160-0309	1	COMPLETE GENERATOR ASSEMBLY

NOTES

NOTES

PowerStation®
AUTOMATIC POWER SYSTEM

CONTACT THE POWERMATE PRODUCT SERVICE DEPARTMENT AT
1-800-445-1805
to obtain warranty service information or to order replacement parts or accessories.

HOW TO ORDER REPLACEMENT PARTS

Even quality built equipment such as the Powermate standby generator you have purchased, might need occasional replacement parts to maintain it in good condition over the years. To order replacement parts, please give the following information:

1. Model No. and Serial No. and all specifications shown on the Model No./Serial No. plate.
2. A brief description of the trouble with the generator.

Powermate Corporation
4970 Airport Road
P. O. Box 6001
Kearney, NE 68848
1-800-445-1805
1-308-237-2181
Fax 1-308-234-4187

Made in USA with domestic and foreign components
Powermate Corporation, Aurora, IL 60504
©2007 Powermate Corporation

All Rights Reserved. Tous droits réservés. Reservados todos los derechos.

Powermate® is a registered trademark of Powermate Corporation.
Powermate® est une marque déposée de Powermate Corporation.
Powermate® es una marca comercial registrada de Powermate Corporation.

PowerStation® is a registered trademark of Powermate Corporation.
PowerStation® est une marque déposée de Powermate Corporation.
PowerStation® es una marca comercial registrada de Powermate Corporation.